THIS DRAWING IS THE PROPERTY OF ANALOG DEVICES INC. IT IS NOT TO BE REPRODUCED OR COPIED, IN WHOLE OR IN PART, OR USED IN FURNISHING INFORMATION TO OTHERS, OR FOR ANY OTHER PURPOSE DETRIMENTAL TO THE INTERESTS OF ANALOG DEVICES.
THE EQUIPMENT SHOWN HEREON MAY BE PROTECTED BY PATENTS OWNED OR CONTROLLED BY ANALOG DEVICES.

RELAY CONTROL CHART

CONTROL	CODE	DEVICE	FUNCTION	CONNECTOR

REVISIONS			
REV	DESCRIPTION	DATE	APPROVED

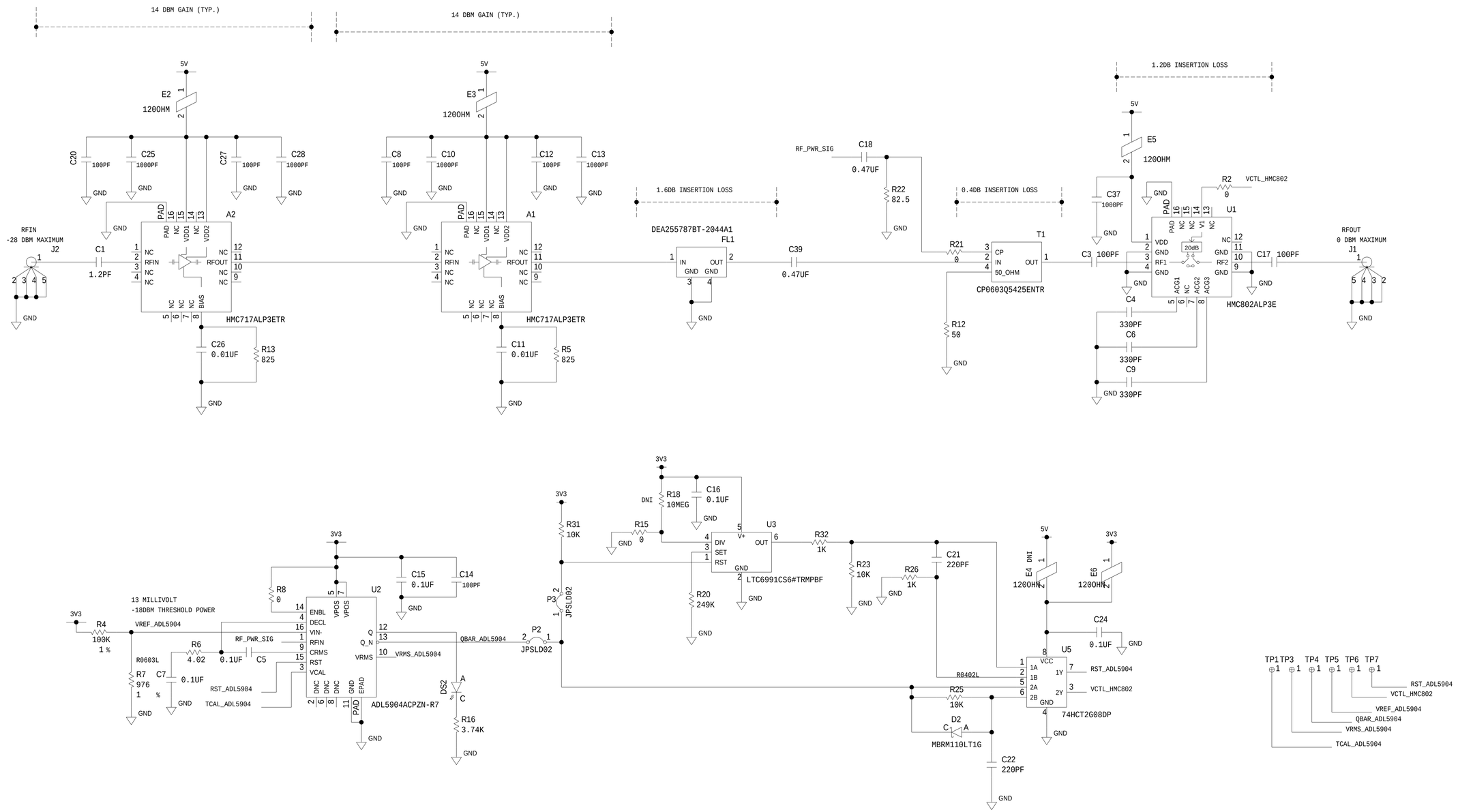

ANALOG DEVICES

THIS DRAWING IS THE PROPERTY OF ANALOG DEVICES INC.
IT IS NOT TO BE REPRODUCED OR COPIED, IN WHOLE OR
IN PART, OR USED IN FURNISHING INFORMATION TO OTHERS,
OR FOR ANY OTHER PURPOSE DETRIMENTAL TO THE INTERESTS
OF ANALOG DEVICES.
THE EQUIPMENT SHOWN HEREON MAY BE PROTECTED BY PATENTS
OWNED OR CONTROLLED BY OWNED ANALOG DEVICES.

SCHEMATIC

HW TYPE : Customer Evaluation Z
Product(s): HMC717A
: LTM8045

DESIGN VIEW	DRAWING NO.	REV
<DESIGN_VIEW>	02_058785	E

PTD ENGINEER	SIZE	SCALE	SHEET
E. REYTA	D	1:1	2 OF 3

REVISIONS			
REV	DESCRIPTION	DATE	APPROVED

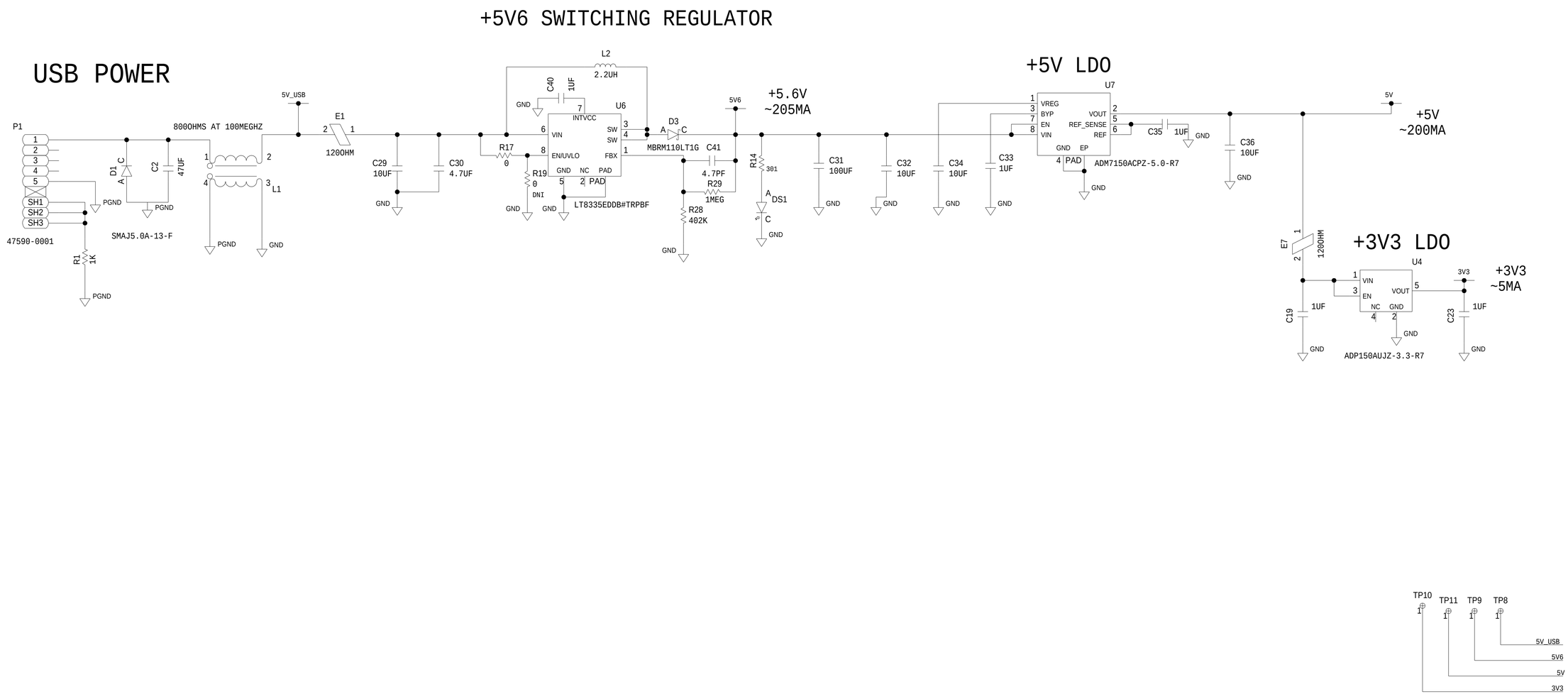

ANALOG DEVICES

THIS DRAWING IS THE PROPERTY OF ANALOG DEVICES INC.
IT IS NOT TO BE REPRODUCED OR COPIED IN WHOLE OR
IN PART, OR USED IN FURNISHING INFORMATION TO OTHERS,
OR FOR ANY OTHER PURPOSE DETRIMENTAL TO THE INTERESTS
OF ANALOG DEVICES.
THE EQUIPMENT SHOWN HEREON MAY BE PROTECTED BY PATENTS
OWNED OR CONTROLLED BY OWNED ANALOG DEVICES.

SCHEMATIC

HW TYPE : Customer Evaluation Z
Product(s): HMC717A
: LTM8045

DESIGN VIEW	DRAWING NO.	REV
<DESIGN_VIEW>	02_058785	E

PTD ENGINEER	SIZE	SCALE	SHEET	OF
E. REYTA	D	1:1	3	3